NEW PRODUCT ANNOUNCEMENT

2008 NPA #01

TPS/RPM Activated Switch, PN 8940

READY TO SHIP!

MSD is making it safe and easy to activate a nitrous system on late model engines with the new TPS/RPM Switch. This switch is easy to use with push button programming and works with mechanical switches or fly-by-wire systems.

You can easily set an rpm activation point in conjunction with a TPS setting for precise control. For high rpm protection you can select an rpm to deactivate the system. The universal switch can also handle up to 25 amps so in most cases a relay and extra wiring isn't needed.

- ***Program an rpm on time as well as an off rpm for engine protection***
- ***Select a Throttle Position Sensor activation point***
- ***Works with fly-by-wire or throttle switch***
- ***Switches up to 25 amps***

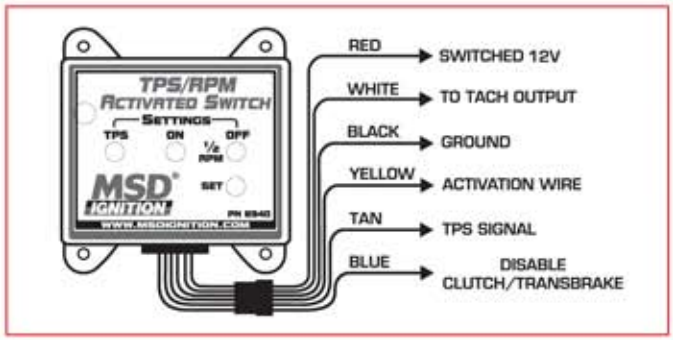

Part Number	Description	MVP Price	UPC
PN 8940	TPS/RPM Activated Switch	$157.10	085132089406

The complete performance electronics source

Ignitions, Coils, Spark Plug Wires, Timing Controls, EFI, Starters, Alternators, Magnetos, Gauges, Data Acqusition and more.

For more information call 915-855-7123

or visit www.msdignition.com